CYDECTIN™
moxidectin
Pour-On for Beef and Dairy Cattle

Antiparasitic
Contains 5 mg moxidectin/mL

For Treatment of Infections and Infestations Due to Internal and External Parasites of Beef and Dairy Cattle

Consult your veterinarian for assistance in the diagnosis, treatment and control of parasitism. If animals are likely to be reinfected following treatment, a strategic parasite control program should be established.

Mode of Action: Moxidectin is an endectocide in the milbemycin chemical class which shares the distinctive mode of action characteristic of macrocyclic lactones. CYDECTIN (moxidectin) Pour-On is specially formulated to allow moxidectin to be absorbed through the skin and distributed internally to the areas of the body affected by endo- and/or ectoparasitism. Moxidectin binds selectively and with high affinity to glutamate-gated chloride ion channels which are critical to the function of invertebrate nerve and muscle cells. This interferes with neurotransmission resulting in paralysis and elimination of the parasite.

Indications: CYDECTIN Pour-On when applied at the recommended dose level of 0.5 mg/2.2 lb (0.5 mg/kg) body weight is effective in the treatment and control of the following internal [adult and fourth-stage larvae (L_4)] and external parasites of cattle:

Gastrointestinal Roundworms
Ostertagia ostertagi - Adult and L_4 (including inhibited larvae)
Haemonchus placei - Adult and L_4
Trichostrongylus axei - Adult and L_4
Trichostrongylus colubriformis - Adult and L_4
Cooperia oncophora - Adult and L_4
Cooperia pectinata - Adult
Cooperia punctata - Adult and L_4
Cooperia spatulata - Adult
Cooperia surnabada - Adult and L_4
Bunostomum phlebotomum - Adult
Nematodirus helvetianus - Adult and L_4
Oesophagostomum radiatum - Adult and L_4

Lungworms
Dictyocaulus viviparus - Adult and L_4

Cattle Grubs
Hypoderma bovis
Hypoderma lineatum

Mites
Chorioptes bovis
Psoroptes ovis (Psoroptes communis var. *bovis)*

Lice
Linognathus vituli
Haematopinus eurysternus
Solenopotes capillatus
Bovicola (Damalinia) bovis

Horn Flies
Haematobia irritans

Management Considerations for External Parasites: For most effective external parasite control, CYDECTIN Pour-On should be applied to all cattle in the herd. Cattle entering the herd following this administration should be treated prior to introduction. Consult your veterinarian or a livestock entomologist for the most appropriate time to apply CYDECTIN Pour-On in your location to effectively control horn flies and external parasites. CYDECTIN Pour-On provides seven days of persistent activity against horn flies. For optimal control of horn flies, the product should be used as part of an integrated control program utilizing other methods to provide extended control.

Persistent Activity: CYDECTIN Pour-On has been proven to effectively control infections and protect from reinfection with *Haemonchus placei* for 14 days after treatment, *Oesophagostomum radiatum* and *Ostertagia ostertagi* for 28 days after treatment, and *Dictyocaulus viviparus* for 42 days after treatment. Efficacy below 90% was observed in some *Ostertagia ostertagi* persistent activity studies at 21 and 28 days posttreatment.

Dosage: CYDECTIN (moxidectin) Pour-On is a ready-to-use topical formulation intended for direct application to the hair and skin in a narrow strip extending along the top of the back from the withers to the tailhead (see Figure 1). Due to the angular topline characteristic of most dairy breeds, it is recommended that all pour-on products be applied slowly to dairy cows. Apply to healthy skin avoiding any mange scabs, skin lesions, mud or manure. Treated cattle can be easily recognized by the characteristic purple color, which will remain for a short period of time after treatment. The recommended rate of administration is 1 mL for each 22 lb (10 kg) body weight which provides 0.5 mg moxidectin for each 2.2 lb (0.5 mg/kg) body weight. The table below will assist in the calculation of the appropriate volume of pour-on which must be applied based on the weight of animal being treated.

Body Weight Lb (kg)	Dose mL	Body Weight Lb (kg)	Dose mL
88 (40)	4	330 (150)	15
110 (50)	5	440 (200)	20
132 (60)	6	550 (250)	25
154 (70)	7	660 (300)	30
176 (80)	8	770 (350)	35
198 (90)	9	880 (400)	40
220 (100)	10	990 (450)	45
242 (110)	11	1100 (500)	50
264 (120)	12	1210 (550)	55
286 (130)	13	1320 (600)	60
308 (140)	14	1430 (650)	65

• Do not underdose. Ensure each animal receives a complete dose based on a current body weight. Underdosing may result in ineffective treatment, and encourage the development of parasite resistance.

Figure 1. Where to Apply CYDECTIN Pour-On

Use Conditions: Varying weather conditions, including rainfall, do not affect the efficacy of CYDECTIN Pour-On.

Administration: CYDECTIN Pour-On is available in three convenient package styles designed for ease of administration and the number of cattle to be treated. Directions for use of each container type follow:

Squeeze-Measure-Pour System
(16.91 fl oz/500 mL and 33.81 fl oz/1 L Bottles)

Determine the weight of the animal, calculate the recommended volume of CYDECTIN Pour-On and locate the volume marker equivalent to this dose on the dosing chamber of the bottle. Remove the dosing chamber cap and squeeze the main chamber of bottle until the desired level of solution is present in the dosing chamber. Release pressure on the container to avoid further filling. Holding the dosing chamber as shown below, pour this measured volume of solution evenly along the backline of the animal from the withers to the tailhead (see Figure 1).

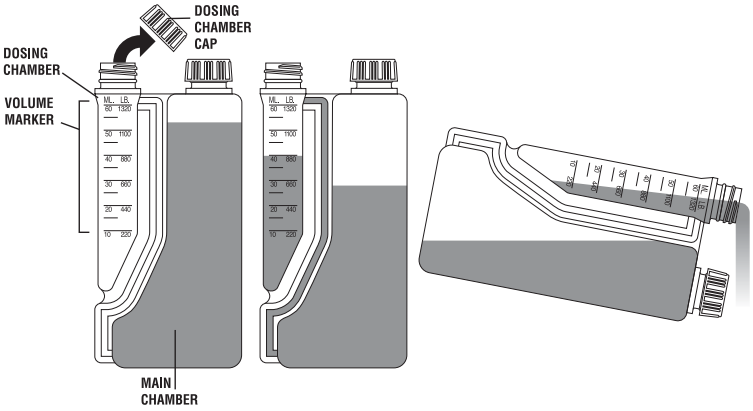

Figure 2. Squeeze-Measure-Pour System
(16.91 fl oz/500 mL and 33.81 fl oz/1 L Bottles)

Large Conventional Containers (84.54 fl oz/2.5 L and 169 fl oz/5 L Bottles and 338 fl oz/10 L Cubetainer)

These bottles are designed for use with the CYDECTIN (moxidectin) Pour- On applicators. Simply remove the transient cap and seal and replace with the vented cap. Attach the applicator feeder hose to the vented cap. Invert the container prior to use (2.5 L and 5 L containers only). Apply the recommended volume of CYDECTIN Pour-On evenly along the backline of the animal from the withers to the tailhead (see Figure 1).

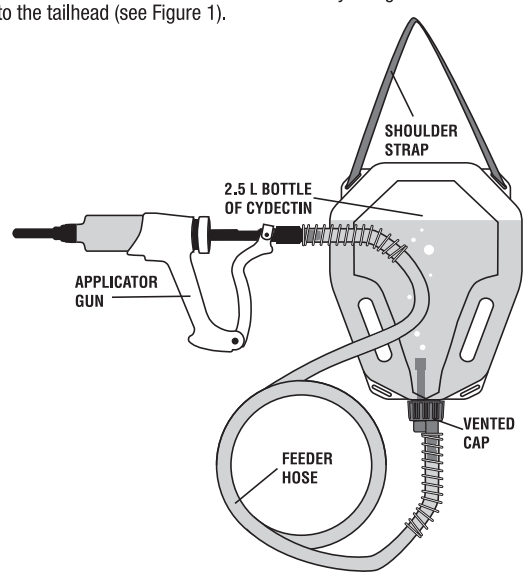

Figure 3. Large Conventional Containers
(84.54 fl oz/2.5 L and 169 fl oz/5 L Bottles)

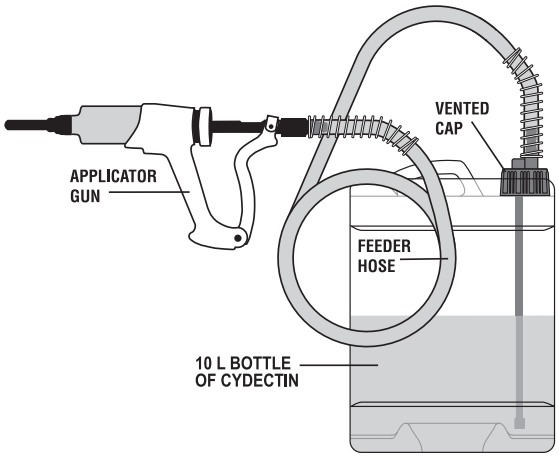

Figure 4. Large Conventional Container
(338 fl oz/10 L Cubetainer)

Animal Safety: Tolerance and toxicity studies have demonstrated an adequate margin of safety to allow treatment of cattle of all ages with CYDECTIN Pour-On. No toxic signs were seen in cattle given up to 25 times the recommended dose level. Newborn calves similarly showed no toxic signs when treated with up to three times the recommended dose level within 12 hours of birth and nursing from cows concurrently treated with the recommended dose level of CYDECTIN Pour-On. In breeding animals (bulls and cows in estrous and during early, mid and late pregnancy), treatment with three times the recommended dose level had no effect on breeding performance.

Warning: Not For Use In Humans. Keep this and all drugs out of the reach of children. This product can cause irritation to skin, eyes, or mucous membranes. In case of accidental skin contact and/or clothing contamination, wash skin thoroughly with soap and water and launder clothing with detergent. In case of accidental eye contact, flush eyes with copious amounts of water. When direct inhalation occurs, cleanse lungs and respiratory passages with fresh air. In case of ingestion do not induce vomiting and seek medical attention immediately. If irritation or any other symptom attributable to exposure to this product persists, consult your physician.

For product questions, to report adverse reactions, or for a copy of the Safety Data Sheet (SDS), call Elanco Product & Veterinary Support at 1-800-428-4441.

Residue Warning: When used according to label directions, neither a pre-slaughter drug withdrawal period nor a milk discard time are required. Meat and milk from cattle treated with CYDECTIN (moxidectin) Pour-On may be used for human consumption at any time following treatment. A withdrawal period has not been established for this product in preruminating calves. Do not use in calves to be processed for veal.

OTHER WARNINGS

- Parasite resistance may develop to any dewormer, and has been reported for most classes of dewormers.
- Treatment with a dewormer used in conjunction with parasite management practices appropriate to the geographic area and the animal(s) to be treated may slow the development of parasite resistance.
- Fecal examinations or other diagnostic tests and parasite management history should be used to determine if the product is appropriate for the herd/flock, prior to the use of any dewormer. Following the use of any dewormer, effectiveness of treatment should be monitored (for example, with the use of a fecal egg count reduction test or another appropriate method).
- A decrease in a drug's effectiveness over time as calculated by fecal egg count reduction tests may indicate the development of resistance to the dewormer administered. Your parasite management plan should be adjusted accordingly based on regular monitoring.

Precautions: For external use only. Do not apply to areas of skin with mange scabs, skin lesions, mud or manure. CYDECTIN Pour-On is not recommended for use in species other than cattle. This product has been formulated specifically for topical use in cattle and should not be used in other animal species or by other routes of administration as adverse reactions may occur.

CYDECTIN Pour-On is effective against the migrating stage of cattle grubs (*Hypoderma* larvae). Treatment with CYDECTIN Pour-On during the period when grubs are migrating through vital areas may cause undesirable host-parasite reactions. Killing *H. lineatum* when they are located in periesophageal tissues may cause bloat. Killing *H. bovis* when they are in the vertebral canal may cause staggering or hindlimb paralysis. Cattle should be treated as soon as possible after heel fly (warble fly) season to avoid this potential problem. Cattle treated with CYDECTIN Pour-On at the end of fly season can be re-treated during the winter without danger of grub-related reactions. Consult your veterinarian for more information regarding these secondary grub reactions and the correct time to treat with CYDECTIN Pour-On.

Environmental Safety: Studies indicate that when moxidectin comes in contact with the soil it readily and tightly binds to the soil and becomes inactive. Free moxidectin may adversely affect fish and certain aquatic organisms. Do not contaminate water by direct application or by improper disposal of drug containers.

Storage: Store product at or below room temperature. Avoid prolonged exposure above 25°C (77°F). If product becomes frozen, thaw completely and shake well prior to use.

Disposal: Dispose of containers in an approved landfill or by incineration.

Package Information: CYDECTIN Pour-On is available in five convenient container sizes. The 16.91 fl oz/500 mL and 33.81 fl oz/1 L are packaged in specially-designed squeeze-measure-pour polyethylene bottles. When treating larger numbers of cattle, 84.54 fl oz/2.5 L, 169 fl oz/5 L or 338 fl oz/10 L conventional polyethylene containers are available for use with most commercially-available topical applicators.

Patent information at http://www.elancopatents.com

Cydectin, Elanco and the diagonal bar logo are trademarks of Elanco or its affiliates
© 2022 Elanco or its affiliates.

Restricted Drug (CA) - Use Only As Directed
Revised: April 2022

Approved by FDA under NADA # 141-099.